

EVOS Pro EV Wallbox

Installation manual

Model: FH-22-3P-T2-5-0

Revised on: 2026.01.15

Version : IM-FH-22-3P-T2-5-0-V1.0EN

Contents

Safety Precautions	P3
Precautions for Use	P3
Installation Safety Precautions	P4
Product Overview and Component Names	P5
Specifications	P6
Overall Dimensions	P7
Package Contents	P8
Required Tools	P8
Required Materials	P8
Selecting an Installation Location	P9
Electrical Wiring	P11
Installation Procedure	P13
Step 1: Remove the Decorative Cover	P13
Step 2: Prepare the Mounting Surface and Install the inner Box	P14
Step 3: Electrical Wiring	P15
Step 4: Connect the Charging Cable	P16
Step 5: Install the Front Cover	P17
Step 6: Functional Checks	P18
Step 7: Registration and Configuration	P19
Maintenance	P22
Revision History	P22
Contact Information	P22

Safety Precautions

Read and observe the following safety precautions. Electrical installation work must be performed by a legally qualified electrician.

- FKK accepts no liability for accidents or damage caused by installation methods other than those described in this manual. Failures caused by such installation are excluded from the product warranty.
- All wiring must be performed by a qualified electrician.
- Electrical work must comply with local laws and regulations.
- **Failures caused by not observing this installation manual or the user manual are excluded from warranty coverage, even during the warranty period.**

Precautions for Use

<table>
<tr><td colspan="4">⚠ WARNING</td></tr>
<tr><td>⚠ CAUTION</td><td>Switch OFF the upstream breaker before periodic inspection. Risk of electric shock.</td><td rowspan="6">REQUIRED</td><td>Use only within the rated capacity. Exceeding it may cause electric shock or fire.</td></tr>
<tr><td rowspan="5">PROHIBITED</td><td>Never disassemble or modify the product. Risk of electric shock or fire.</td><td>Keep the charging connector terminals dry. Risk of electric shock.</td></tr>
<tr><td>Use only to charge electric or plug-in hybrid vehicles. Other uses may cause failure.</td><td>If the cable is twisted, untwist it before use; do not pull forcefully. The cable may break.</td></tr>
<tr><td>Do not handle the charging connector with wet hands. Risk of electric shock.</td><td>Do not use a damaged connector or cable. Risk of electric shock or fire. Contact us if damaged.</td></tr>
<tr><td>Do not apply excessive force to the cable. It may break.</td><td rowspan="2">People with implanted pacemakers or defibrillators (ICDs) should not lean against the charger during charging; radio emissions may affect their operation.</td></tr>
<tr><td>Do not subject the product to strong impacts. Risk of electric shock, fire or failure.</td></tr>
<tr><td colspan="4">⚠ CAUTION</td></tr>
<tr><td>⚠ CAUTION</td><td>The surface may become hot in direct sunlight. Exercise care in hot weather.</td><td rowspan="4">REQUIRED</td><td>Press the unlock button before removing the charging connector to avoid damage.</td></tr>
<tr><td rowspan="3">PROHIBITED</td><td>Do not operate the product when flooded or wet. Risk of fire or electric shock.</td><td>If you notice unusual odors, heat or discoloration, stop using the product immediately and contact the installer.</td></tr>
<tr><td>Do not stand on or lean against the product. Damage or accidents may result.</td><td>Read the vehicle user manual before using this product.</td></tr>
<tr><td>Do not cover the product with cloth, bedding or clothing. Malfunction may result.</td><td></td></tr>
</table>

Installation Safety Precautions

⚠ WARNING			
PROHIBITED	Do not touch energized terminals. Risk of electric shock.	REQUIRED	Reinstall all terminal covers removed during installation. Risk of shock or short circuit.
	Do not install near flammable or corrosive gases, dust or combustible materials. Risk of shock, fire or malfunction.		Use a dedicated circuit and install a high-speed, high-sensitivity RCCB (0.1 s, 30 mA) upstream.
	Do not install on inadequate foundations, near escape routes, in winds of 40 m/s or more, or where vehicles may collide with it.		Provide Class D earthing. Failure may cause electric shock or malfunction.
			Where vehicles pass nearby, install protective barriers or wheel stops to prevent collision.
	Do not install where the charging cable is stretched during use.		This product is intended only for single-phase 200 V AC power. Do not connect other supplies.
	Branch wiring inside the product is not permitted.		
⚠ CAUTION			
REQUIRED	Wear appropriate personal protective equipment, including gloves, during installation.	REQUIRED	For line-to-line insulation resistance testing, disconnect the wiring from the product. For line-to-earth testing with the wiring connected, use 250 V or less. Testing at 500 V or more may damage the product.
	Check the surrounding area when carrying and installing the unit to prevent injury from dropping or tipping.		Take care not to scratch the product with knives or cutters while unpacking.
	Do not use alcohol, thinner or hydrochloric acid for cleaning. Use a soft, well-wrung damp cloth.		
	Wear appropriate personal protective equipment, including gloves, during installation.		For line-to-line insulation resistance testing, disconnect the wiring from the product. For line-to-earth testing with the wiring connected, use 250 V or less. Testing at 500 V or more may damage the product.

Product Overview and Component Names

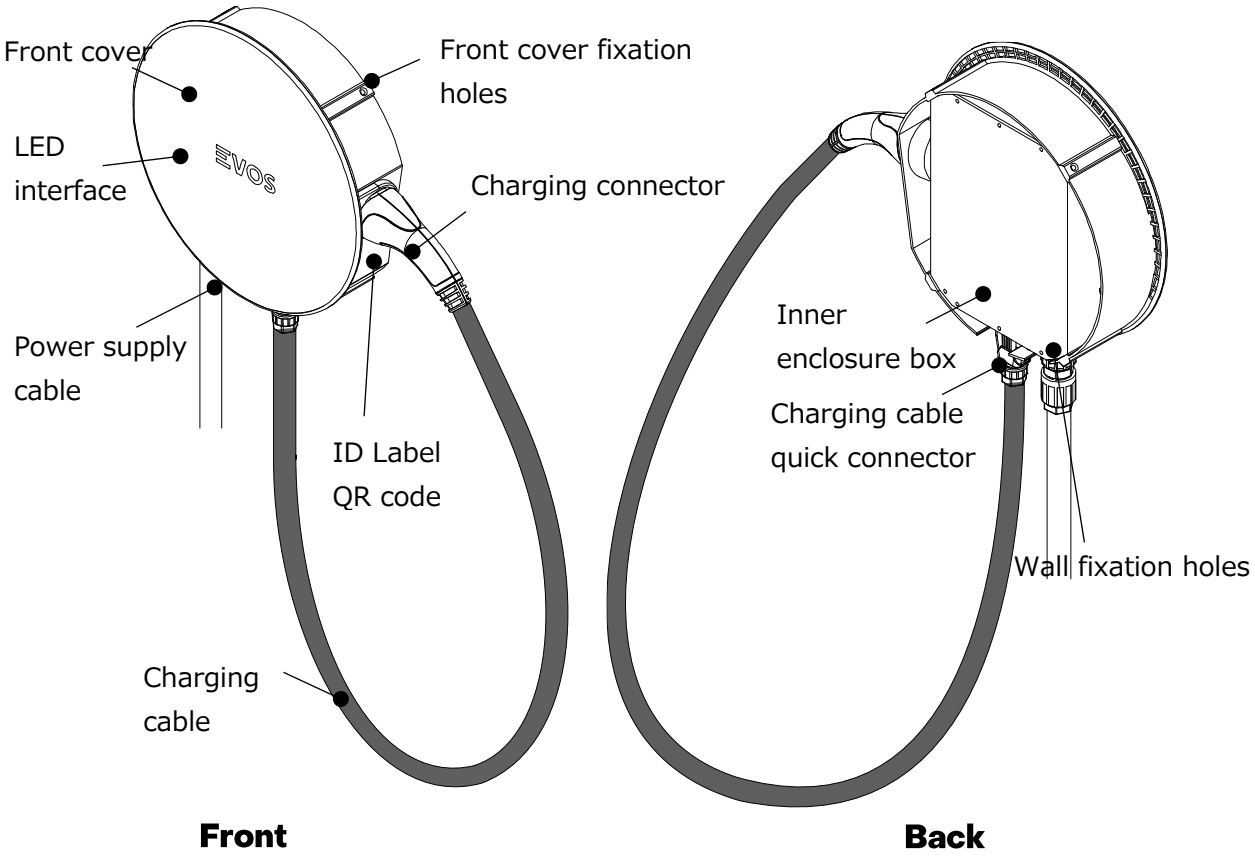

Inner enclosure box details

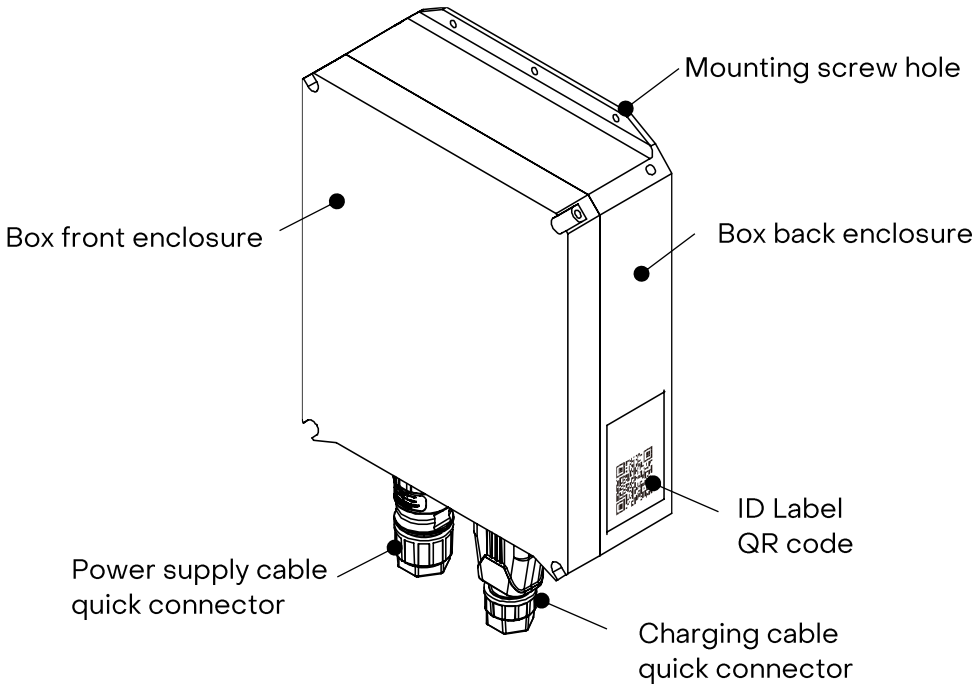

Specifications

	Item	Specification
Product	Model name	EVOS Pro
	Model number	FH-22-3P-NC-5-0
Output	Output	7 kW (1P) / 22kW (3P)
Input	Rated input current	32A per phase
	Rated input voltage / frequency	Single-phase or Three-phase 230~250 V AC 50/60 Hz
	Standby power	5W
Type	Charging mode	Mode 3, Case C
	Charging connector compliance	IEC 62196-2 Type 2/ SAE J1772
Dimensions	Charging cable length	Approx. 5 m
	Height	390.7 mm
	Width	390.7 mm
	Depth	98 mm
Appearance	Color	Black
Weight	Weight	3.6kg (charger); 2.1 kg (cable)
Environment	Installation environment	Indoor and outdoor
	Ingress protection	IP65 (charger); IP44 (connector)
	Impact protection	IK10
	Installation environment	≤95% RH (non-condensing); altitude ≤2,000 m
	Operating temperature	-25°C to +50°C
Communications	Communication interfaces	Bluetooth 4.1 LE/BR/EDR 24 Mb/s; Wi-Fi 4 802.11 b/g/n WPA2 150 Mb/s
	Communication protocol	OCPP 1.6J (upgradeable to OCPP 2.0.1)
Safety	Protection functions	6 mA DC residual-current detection; overcurrent, overvoltage, undervoltage, surge, contact and temperature fault protection
Operation	Indicator	LED
	Control	Dedicated web app (via QR code)
Standards	Applicable standards	IEC 61851-1, IEC 61851-21-2
	Certifications	CE
Storage / Packaging	Storage temperature	-30°C to +85°C
	Package dimensions / weight	500 x 520 x 200 mm, 7.9kg
Mounting	Mounting method	Wall or surface mounting (optional pole)
	Mounting height	At least 900 mm from floor to lower edge

Overall Dimensions

Unit: mm

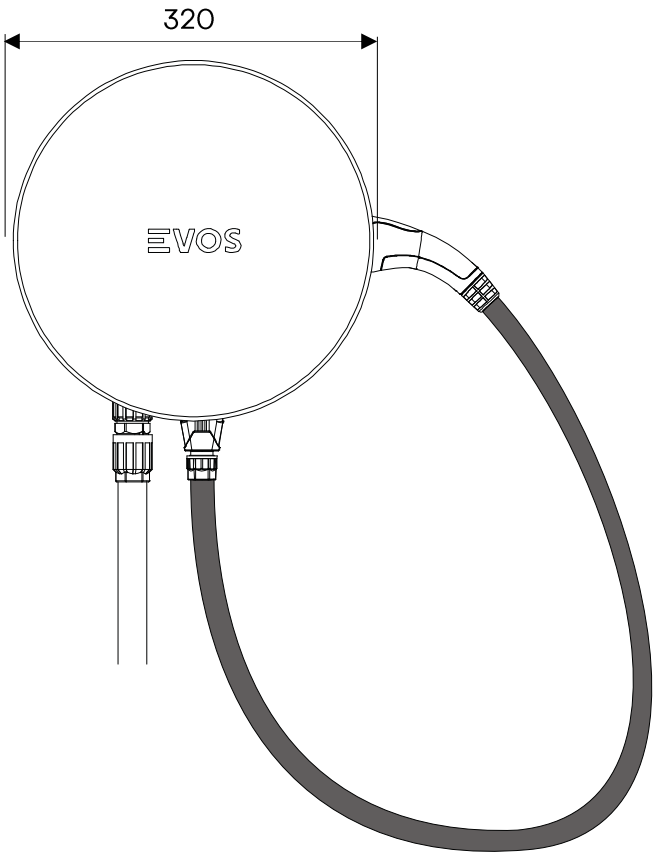

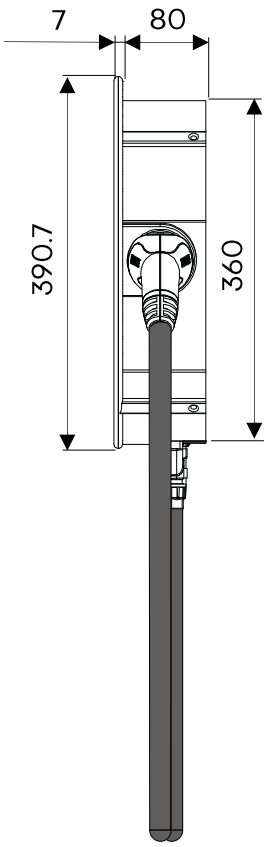

Front

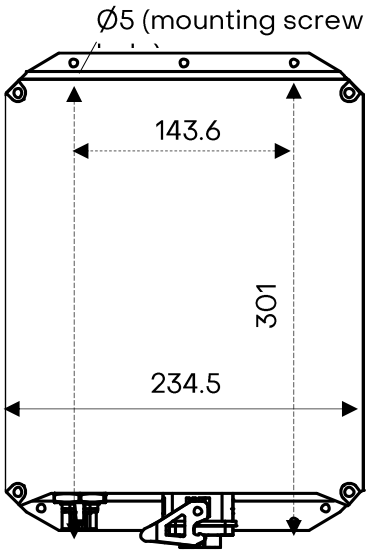

Side

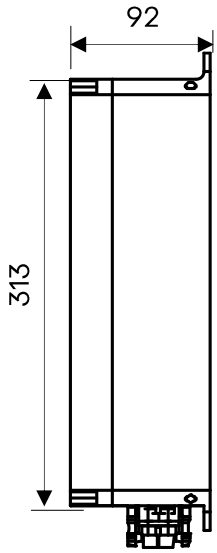

Inner enclosure box details: front and Side view

Package Contents

Charger unit (enclosure and inner enclosure box)	Charging cable set with quick connector	Power supply quick connector set	Activation ID	Installation Manual (this document))
x 1	x 1	x 1	x 1	x 1
	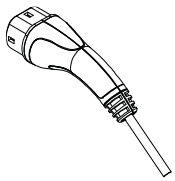	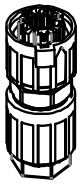	  Hand this to the charger owner.	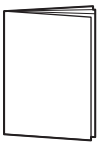

Required Tools

Power drill	Screwdriver with bits	Phillips bit	M5 tamper-resistant screw bit	90 mm extension bit
	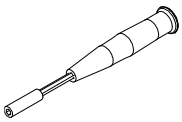		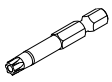	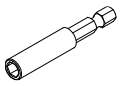
6.5 mm (1/4 in.) drill bit	EVSE test adapter	Multimeter	Stud finder	Spirit level
	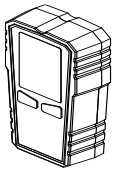	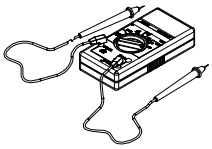	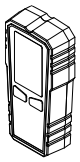	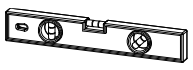
Tape measure	Wire stripper	Cable stripper (heavy-gauge)	Side cutters	Wi-Fi enabled smartphone or computer
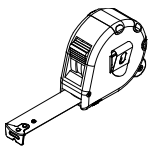	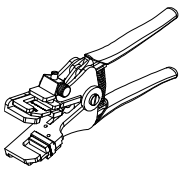	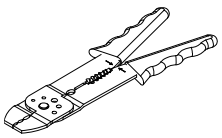	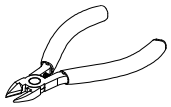	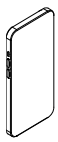

Required Materials

- Power supply cable: recommended 3 cores insulated cable (resistant 105°C) stranded conductor cross-section 6 mm²
- Four mounting screws and suitable anchor bolts/wall plugs (typically M4 × 20; select according to the mounting surface).

Selecting an Installation Location

Consider the following factors when selecting a suitable location for the EV charger:

Safety:

Install the charger in a safe, stable location that does not obstruct pedestrians, vehicles, parking or vehicle access.

Vehicle access:

Locate the charger so that the charging connector can reach the vehicle inlet, typically at the front or side. Allow sufficient space to pull out the charging cable. Never install where the cable would be under tension during use.

Wi-Fi reception:

For optimal operation, the charger must have a reliable connection to the local Wi-Fi network. Avoid concrete, masonry, metal studs and other obstacles that attenuate the signal. As a practical indication, if a smartphone maintains a stable connection to the local Wi-Fi network at the intended location, the charger should also be able to connect. Consider a Wi-Fi repeater if reception is insufficient.

When connecting the charger to a corporate or managed Wi-Fi network, UTM (Unified Threat Management) systems or firewalls may restrict communication with the EVOS cloud server. Ensure that outbound UDP traffic on port 51820 is permitted to allow the charger to establish its secure VPN connection. If necessary, contact the network administrator to verify the settings.

Installation location precautions:

- Avoid excessive heat, humidity, dust, smoke, corrosive or flammable gases or vapors, salt contamination, excessive noise and vibration.
- Do not obstruct evacuation routes, stairs or emergency exits.
- Do not install in locations exposed to wind speeds of 40 m/s or more.
- Choose a position where the connector can reach the vehicle without strain.
- Avoid positions where the charger or cable could cause collisions or trips.
- Do not trap foreign objects between the charger and mounting surface.
- Protect the charger against strong impacts, which may cause electric shock, fire or malfunction.
- Select suitable power cables and flexible conduits for the wiring installation.
- Route power cables with adequate slack and without mechanical tension.
- Waterproof all cable entry points after installation.
- Leave adequate clearance for servicing and inspection.

Choose the installation location with all these requirements in mind. Contact us if advice is needed.

Selecting the mounting surface:

The charger can be mounted on a flat, load-bearing wall, support or pole. The charger and cable weigh 5.3 kg in total. Choose a stable, rigid surface capable of supporting this weight. Lightweight walls may require reinforcement (such as steel channels) behind the wall to prevent the charger from falling.

Mounting height:

Install the lower edge of the round charger housing 900–1,200 mm above the floor. We recommend at least 200 mm of clearance around the housing, with sufficient room to wrap the charging cable around the unit or place the connector in its holder.

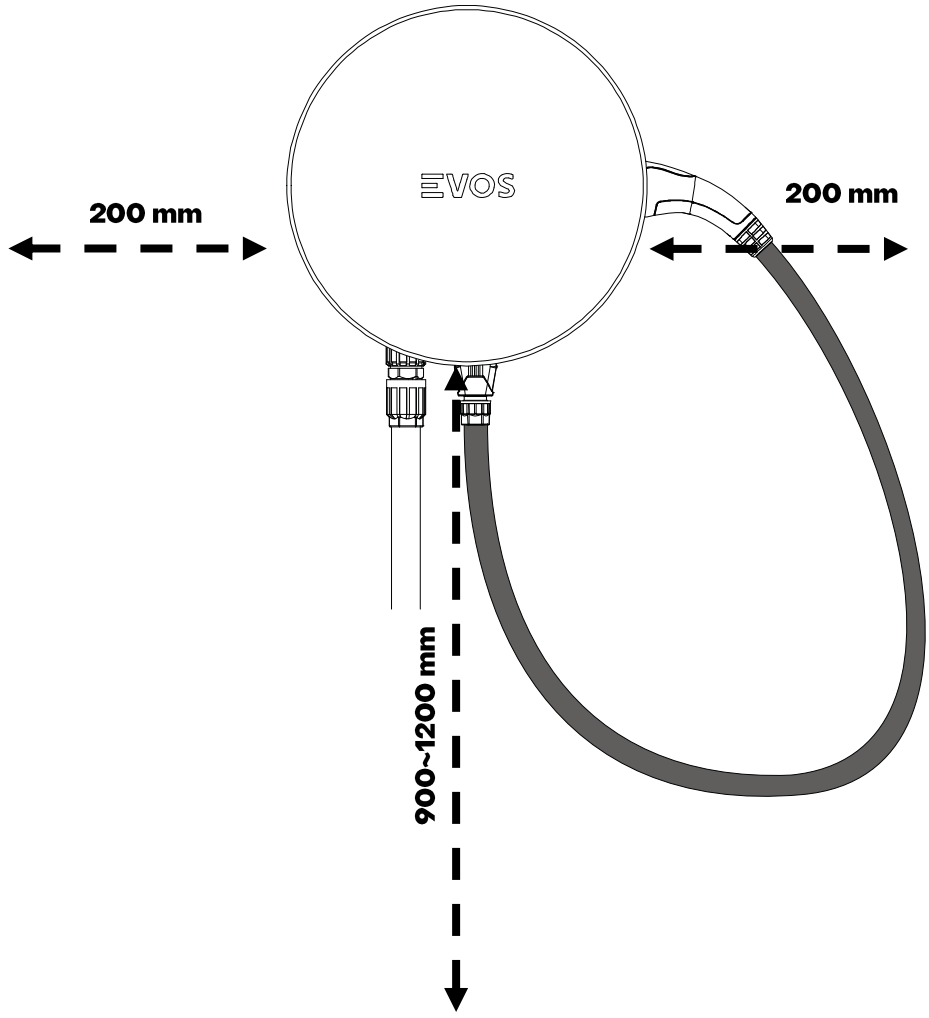

Electrical Wiring

Overall wiring diagram:

- Provide a dedicated circuit from the upstream residual-current circuit breaker (RCCB).
- Install a high-sensitivity, high-speed RCCB (30 mA, 0.1 s).
- Provide protective earthing in accordance with local requirements or IEC 60364a.

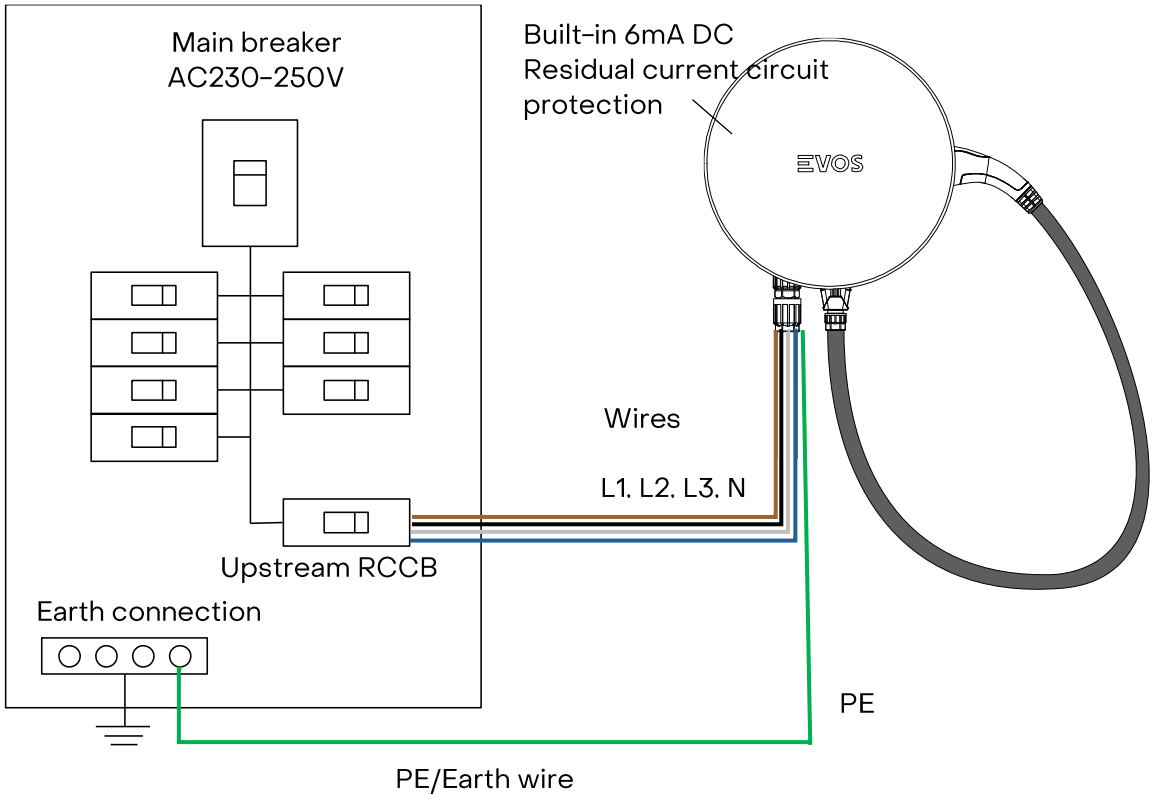

Electrical characteristics of wiring:

Input voltage	Single-phase	Single-phase or Three-phase 230-250 V AC, 50/60 Hz
Output power	AC	7 kW (1P) / 22kW (3P)
Upstream RCCB	Recommended rated current	40 A or less
	Trip time / sensitivity	0.1 s / 30 mA
Recommended power conductor size	Stranded conductor	2 x 6 mm² stranded (insulation resistance 105°C recommended)
Recommended protective earth size	Stranded conductor	1 × 6 mm² stranded

Supply Wiring

Where multiple stations are connected to the same three phase supply, it is recommended to rotate L1, L2, L3 input phases to prevent overloading.

1 Phase Installation

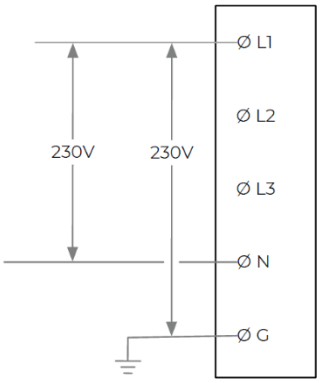

Only one phase (L1, L2 or L3) may be connected to L1 designation on input connector. Neutral (N) and Earth (PU) must be connected to designation on input connector.

The phase voltage must measure 230V-250V to neutral. L2 or L3 designation on input connector cannot be used for 1 phase installation.

3 Phases Installation

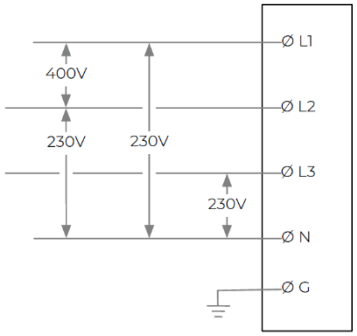

All three phases (L1, L2 and L3), Neutral (N) and Earth (PE), must be connected to corresponding designation on the input connector.

Each phase voltage must measure 230V-250V to neutral.

Installation Procedure

Step 1: Remove the Decorative Cover

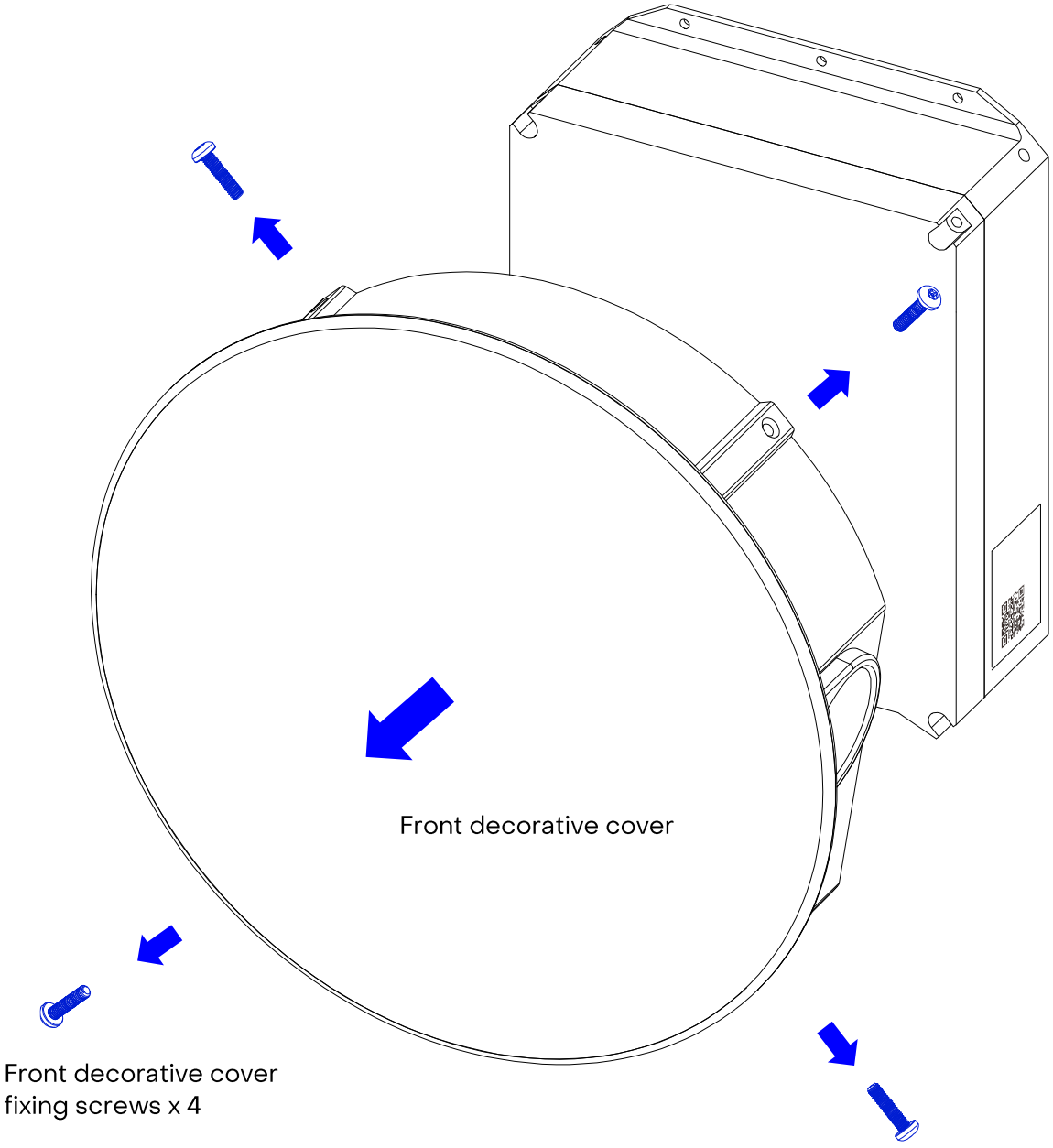

(1) Using an M5 pin-in-hex tamper-resistant (TRF) screwdriver bit, remove the four screws securing the front decorative cover. Keep the screws safely for reinstallation.

(2) Remove the front decorative cover.

(3) Place the front decorative cover on a flat surface to prevent scratches or damage.

Step 2: Prepare the Mounting Surface and Install the inner Box

(1) If available, use a stud finder to locate structural supports and select the mounting position. Installation is also possible on plywood or another flat wall surface capable of supporting the charger weight.

CAUTION: Depending on the mounting surface, suitable anchor bolts or wall plugs may be required.

(2) Following the selected cable route and the diagram below, mark the four fixing points on the mounting surface. Drill two upper and two lower pilot holes using a 6.5 mm (1/4 in) drill bit.

NOTE: Before fastening, place a spirit level on the distribution box and ensure it is level.

(3) Using an M4 Phillips bit, fasten the unit to the mounting surface with four M4 × 20 screws. Do not exceed 5 N·m tightening torque.

(4) Check again with a spirit level that the inner box is level.

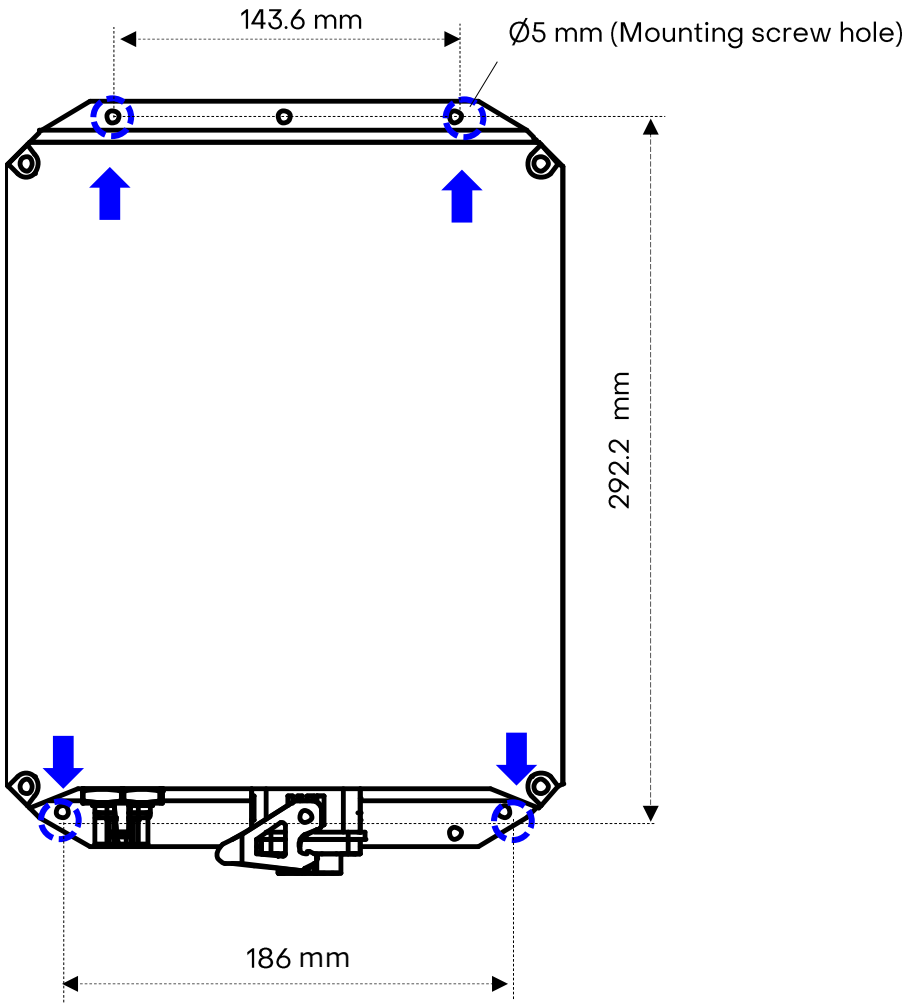

Step 3: Electrical Wiring

⚠ WARNING: Before installation, always switch OFF the upstream circuit breaker supplying this product. Risk of electric shock.

Prepare the Power Cable Connector on the Upstream RCD Side:

A quick-connect connector is used to reduce the time required for power wiring on site.

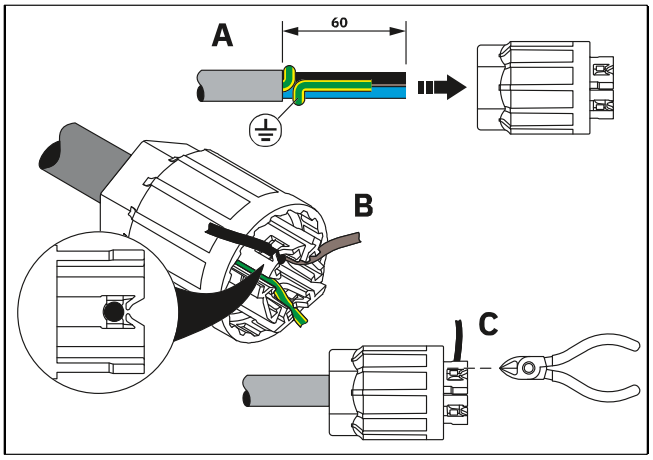

1. Strip approx. 60 mm off the cable.
2. Loop the PE conductor around the live conductors.
   As a result, the PE conductor will be pulled out of the terminal block last if strong tension is exerted on the cable.
3. Insert the cable into the connector nut.
4. Secure the conductors in the conductor support of the splice body. Follow the assigned numbers. Use the PE symbol as a reference.
5. Use a diagonal cutter to cut off the conductors flush on the splice body.
6. Tighten the cable gland to 4.5 N·m.
7. After assembly, check connector continuity.

Connecting the power cable to the charger:

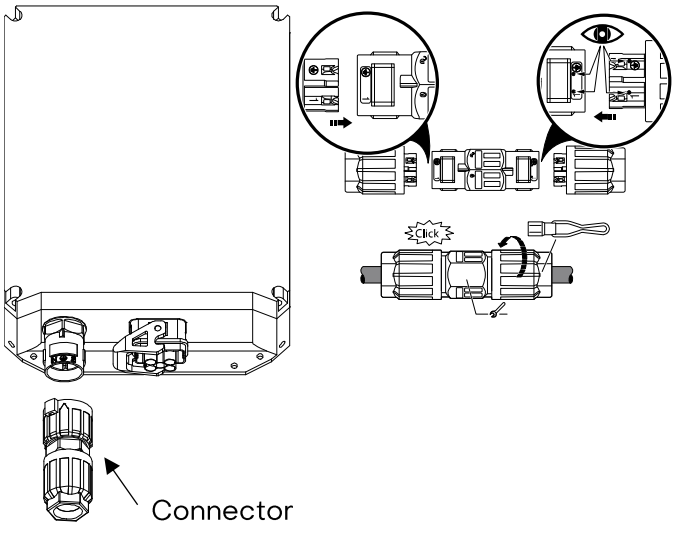

1. Twist the grey collar of the connector to far left.
   Collar will rise slightly and click in place.
2. Locate white indicator on station inlet
3. Orient Leverage Point and Arrow on the grey collar of connector to the left side of the white indicator on the input connector.
4. Slide the connector upwards as far as it will go.
5. Twist the grey collar of the connector to the right until the locking tooth of the leverage point clicks over the catch.
6. If the grey collar does not twist to the right, the connector is not fully inserted.

Step 4: Connect the Charging Cable

(1) Lift the latch on the housing connector located on the right-hand side of the distribution box.
(2) Insert the charging cable connector into the inner box housing connector. If it does not fit, rotate it 180° and try again.
(3) Push the ltach downward until it clicks into place.
(4) Gently pull the charging cable connector downward to confirm it is securely locked. It should not move when the retaining clip is engaged.

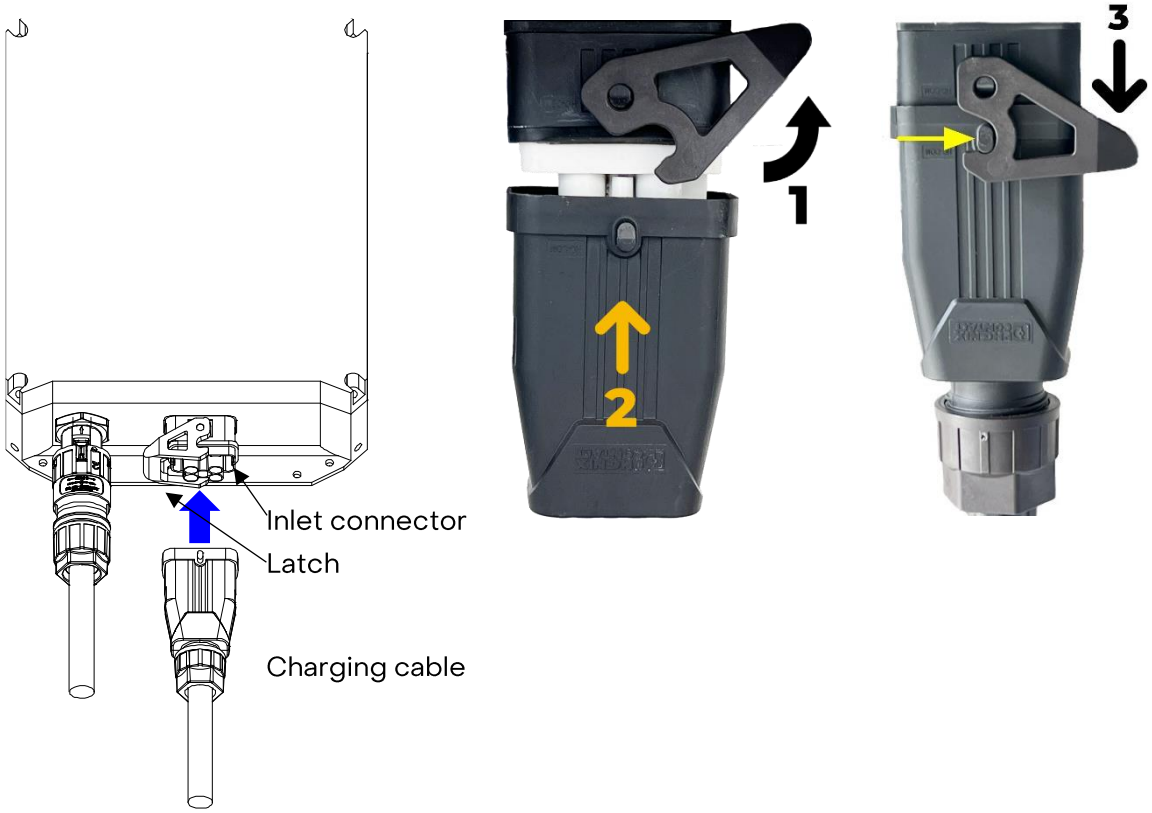

Step 5: Install the Front Cover

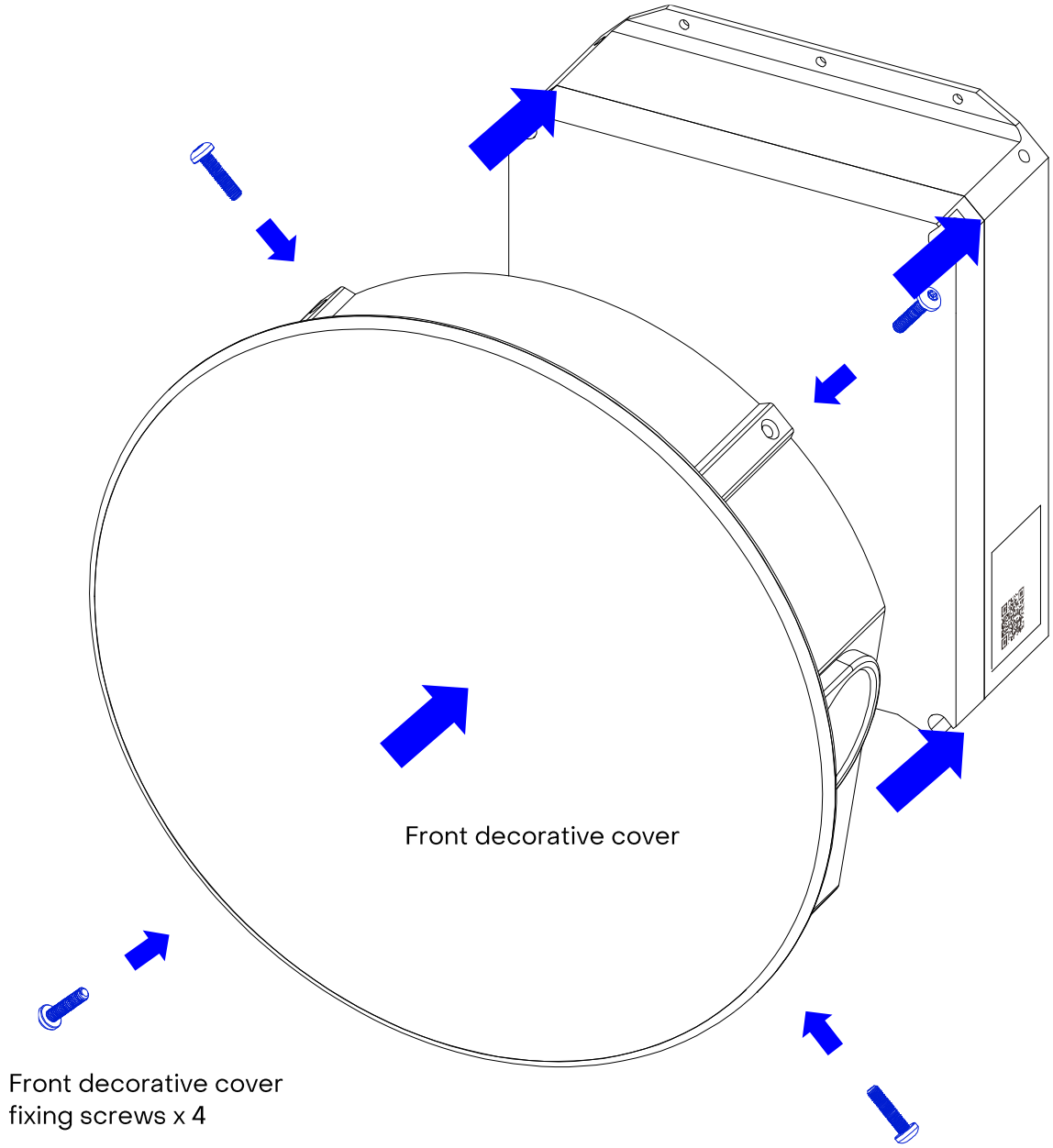

(1) Reverse Step 1. Align the front decorative cover with the distribution box so that the charging plug holder faces right.

(2) Slide the front decorative cover over the four locating edges of the distribution box.

(3) Using an M5 pin-in-hex tamper-resistant (TRF) screwdriver bit, secure the front decorative cover with the four screws.

Step 5: Functional Checks

Switching on the power:

Check all connectors are securely connected, then switch ON the upstream supply. Verify that the status LED illuminates. This may take approximately 30 seconds.

Electrical testing:

Carry out all required post-installation electrical tests and complete the installation checklist below.

	#	Item	Result	
Wiring	1	Are the conduit and protective earth connected according to this manual?	○	×
	2	Is the upstream RCCB on a dedicated circuit, rated 30 mA / 0.1 s?	○	×
Mounting	1	Is the anchor embedment depth appropriate?	○	×
	2	Are the anchor bolts securely tightened?	○	×
	3	Are the mounting screws securely tightened?	○	×
	4	Is the charger level?	○	×
	5	Is the charger free from movement or wobbling?	○	×
	6	Is the power connector locked so it cannot be removed by hand?	○	×
	7	Is the charging cable connector locked so it cannot be removed by hand?	○	×
	8	Are the M5 tamper-resistant cover screws tightened?	○	×
Charger condition	1	Are the charging cable, decorative cover and enclosure free of damage?	○	×
	2	Is the charger easily accessible?	○	×
	3	Is the charger installed at the correct height?	○	×
	4	Is the Wi-Fi signal at the charger strong and stable?	○	×
	5	Is the charger protected from vehicle collisions or other impacts?	○	×

Charging test:

Connect a suitable EVSE test adapter (e.g., Kyoritsu KEW 8601). Test and record the charging operation, including CP states, fault simulation, voltage measurement and insulation resistance as applicable.

NOTE: A thermal camera is recommended to check for hot spots at the input connector.

Step 6: Registration and Configuration

Scan the QR code on the charger's plastic housing using a smartphone to access the EVOS app and register the charger.

If the QR code does not work, enter the following address in your browser: https://evos.app/c/[serial number] (the serial number is printed on the Activation ID card). Example: for serial number 123456, use https://evos.app/c/123456.https://evos.app/c/123456

(1) On the EVOS app, sign in as an installation partner using your username and password, then select "Sign In."

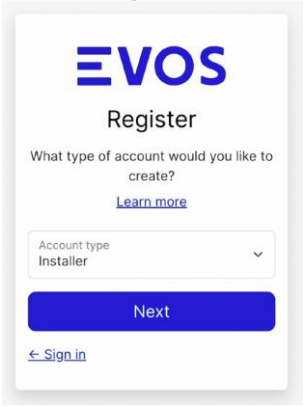

(2) If you do not have an installation partner account, select "Register," complete the form and create your account. Check your email for the approval message.

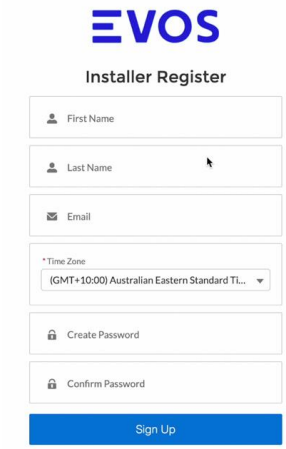

(3) If you need to reset your password, select "Forgot Password" on login page.

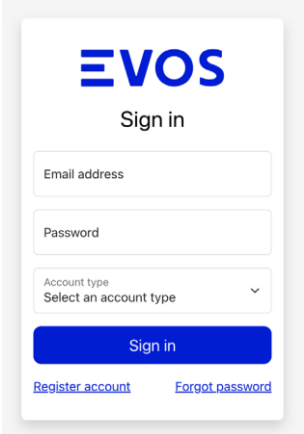

(4) After signing in, the installation partner page appears. On first use, register your electrician licence information by selecting “Add.”

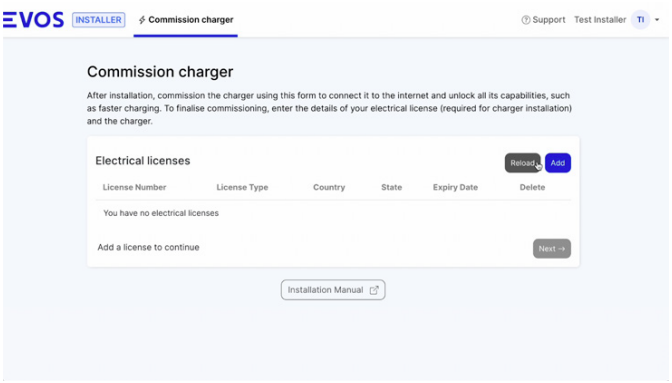

(5) Enter the required information on the electrician licence registration page and select “Add.”

(6) Return to the installation partner page and select “Next.”

(7) On the new charger configuration page, enter the following information:

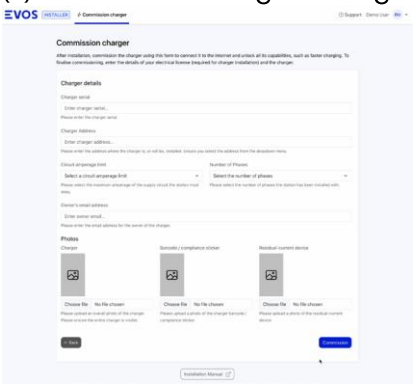

1) Charger serial number
(see the charger body label or Activation ID)
2) Address of the installation site
3) Circuit current limit (maximum output current)
4) Number of phases
5) Charger owner’s email address
6) Upload a photo of the charger installed
7) Upload a photo of the rating label
8) Upload a photo of the upstream RCCB
9) After entering all information, select “Install.”

CAUTION: Set the maximum charging current according to the dedicated circuit conductor size, breaker rating and installation conditions. Never set a value above the permissible current.

(8) A confirmation screen appears when installation is successful.

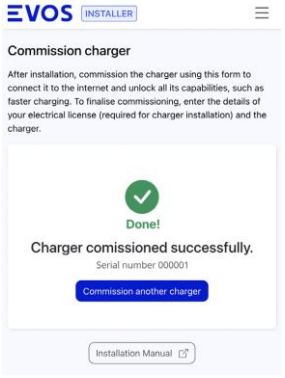

⚠ If the process fails, try again. Contact us if it continues to fail.
After registration, verify communication status, maximum charging current and charging operation. Hand over the charger to the customer only after all installation checks have passed.

Maintenance

Cleaning:

- Wipe dirt away using a soft towel, cloth or sponge dampened with water and thoroughly wrung out.
- Remove foreign matter or dust from the charging connector terminals using an air duster or similar method.
- Remove accumulated snow.
- Do not clean with high-pressure water. Damage may result.
- Do not use scouring pads, abrasives, alcohol, benzine or other solvents. Damage may result.
- Do not use wax or car shampoo. Damage may result.

Routine and periodic inspection:

For safe use, perform the following checks regularly.

If a defect is found or repair/replacement is needed, contact us.

Routine inspection (before each use)

- Check the charging connector for cracks or chips.
- Check the charging cable for cracks or excessive twisting.
- Check the charging connector for mud or dust.
- Check that the status LED operates normally.

Periodic inspection (once per year)

- Inspect the charging cable and replace it if damaged or severely twisted.
- Check for damaged parts.
- Check that the charger is not tilted.

Charging connector

- The charging connector has a limited service life and must be replaced periodically, typically after approximately 10,000 mating cycles.
  Actual lifetime depends on frequency of use, operating conditions and environment.
- Cable assemblies must be replaced by EVOS, its authorized representative or a qualified person.

Revision History

#	Revision content	Date	Author
1	Version IM-FH-22-3P-T2-5-0-V1.0EN issued	2026.01.15	M.S
2			
3			
4			
5			
6			
7			
8			
9			
10			

Specifications and appearance may change without notice as part of continuous product improvement.

Contact Information

EVOS Energy Japan / FKK Corporation

Head Office / EV Business Division
601-8399
11 Tsutsumisoto-cho, Kisshoin, Minami-ku, Kyoto, Japan

TEL 075-314-8760
MAIL info@evosjapan.com
WEB www.evosjapan.com